03/2024

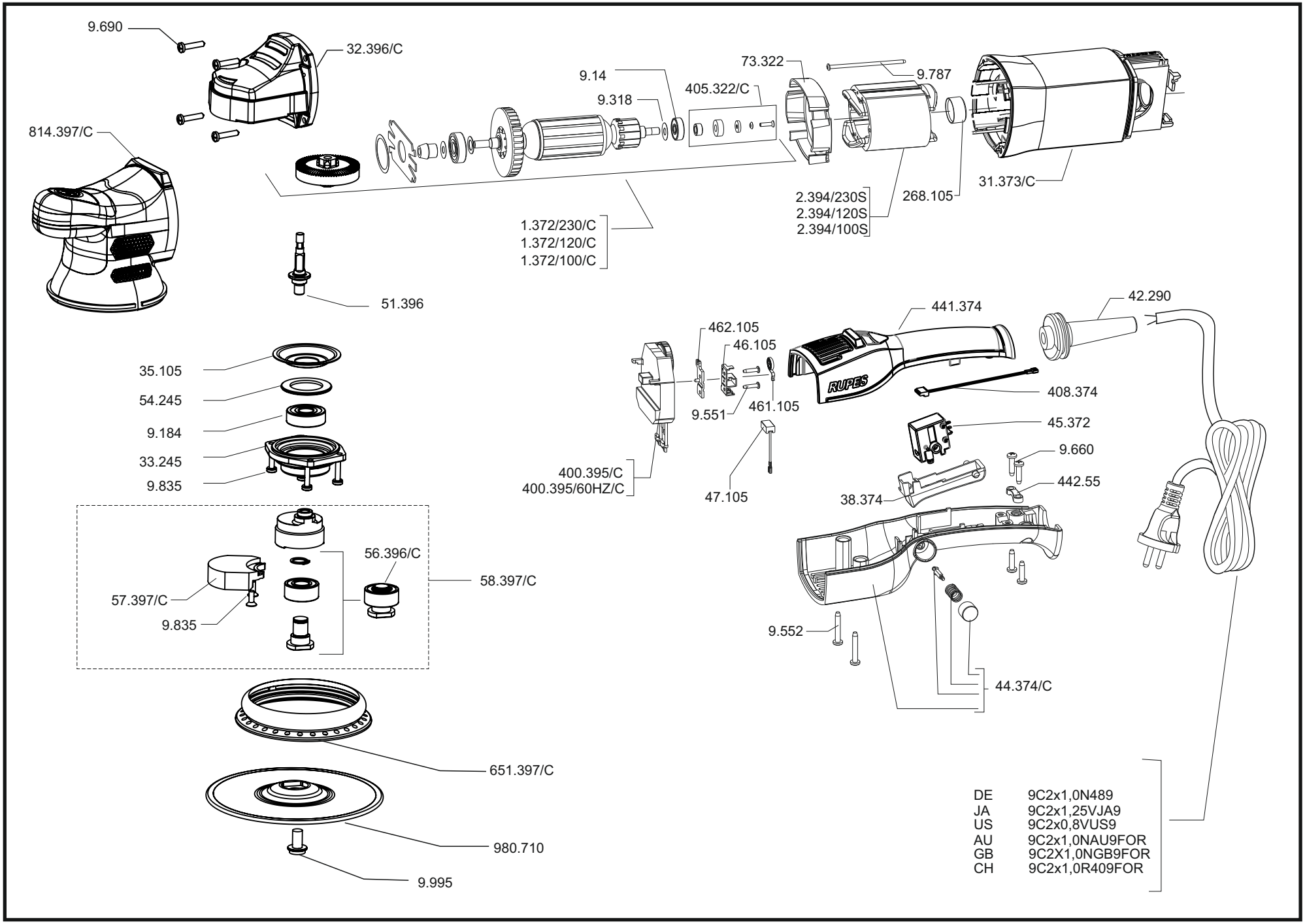

DE	9C2x1,0N489
JA	9C2x1,25VJA9
US	9C2x0,8VUS9
AU	9C2x1,0NAU9FOR
GB	9C2X1,0NGB9FOR
CH	9C2x1,0R409FOR

RUPES

LUCIDATRICE ROTORBITALI
RANDOM-ORBITAL POLISHER

LHR15V